REVIEW INDEX				
N°	NAME	FUNCTION	NOTE	DATE
01	JULIO	PROJECTIST	NONE	01/04/2021

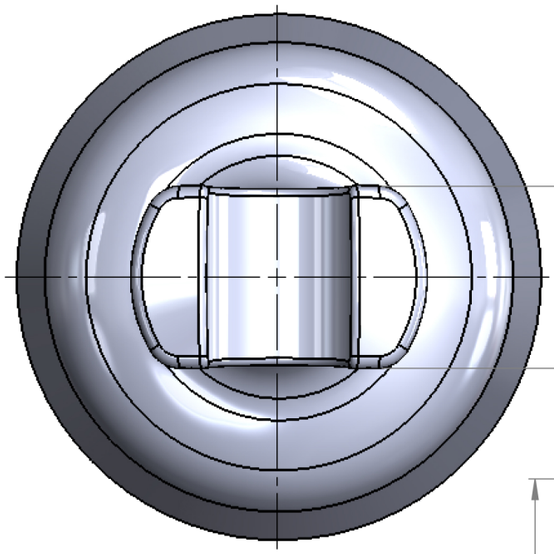

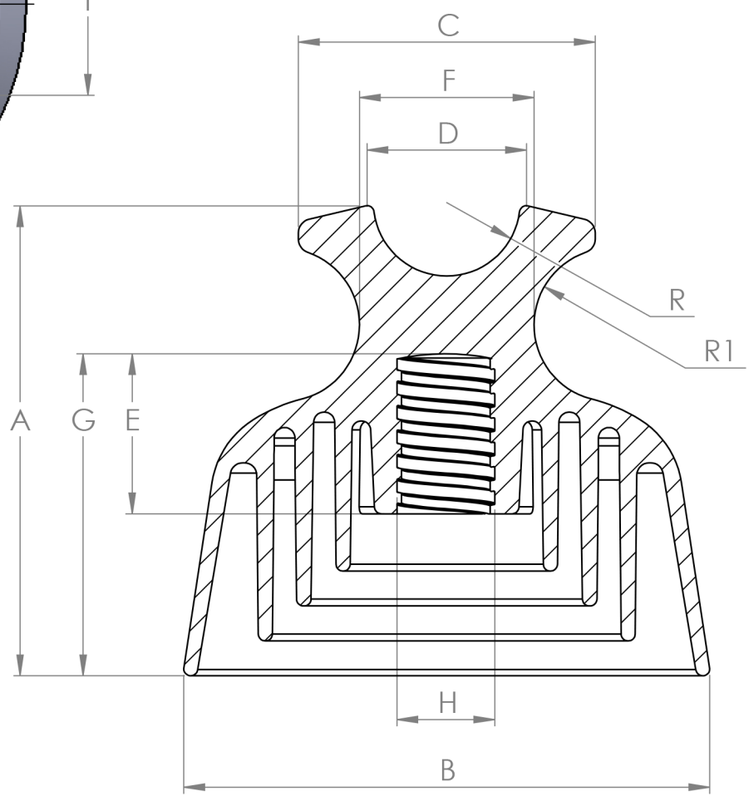

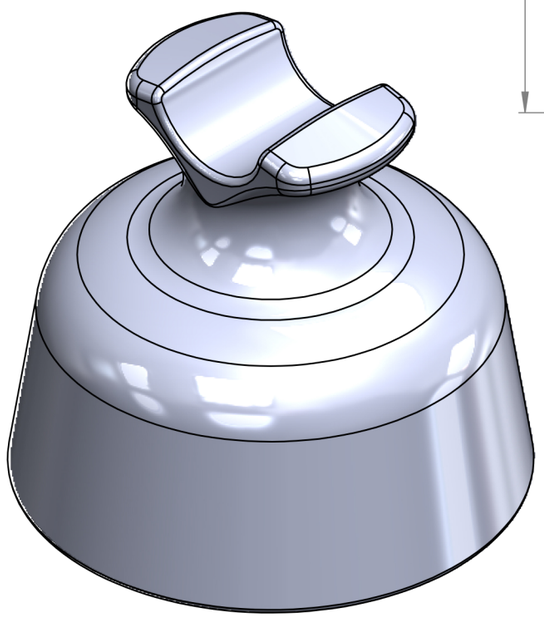

ITEM	DESCRIPTION	DIMENSIONS	
		mm	in
01	LEAKAGE DISTANCE	810	31.88
02	DRY-ARC DISTANCE	250	9.84
03	A	175 ± 5	6.88 ± 0.19
04	B	192 ± 5	7.55 ± 0.19
05	C	70 ± 5	2.75 ± 0.19
06	D	49 ± 5	1.92 ± 0.19
07	E	45 ± 5	1.77 ± 0.19
08	F	69 ± 5	2.71 ± 0.19
09	G	125 ± 5	4.92 ± 0.19
10	H	25 ± 3	1.00± 0.12
11	I	52 ± 5	2.04 ± 0.19
12	R	22 ± 2	0.87 ± 0.08
13	R1	22 ± 2	0.87 ± 0.08
	ELECTRICAL VALUES		
14	NOMINAL FREQUENCY	Hz	50/60
15	TYPICAL APPLICATION	kV	35
16	LOW FREQUENCY DRY FLASHOVER	kV	105
17	LOW FREQUENCY WET FLASHORVER	kV	60
18	CRITICAL IMPULSE FLASHOVER - POSITIVE	kV	150
19	CRITICAL IMPULSE FLASHOVER - NEGATIVE	kV	170
20	LOW FREQUENCY PUNCTURE	kV	135
21	LOW FREQUENCY TEST VOLTAGE - RMS TO GROUND	kV	22
22	MAXIMUM RIV at 1000 kHz	µV	100
	MECHANICS VALUES		
23	CANTILEVER STRENGTH	kN / 1b	15 / 3300
	GENERAL CHARACTERISTICS		
24	NECK DESIGNATION		F
25	UNIT WEIGHT	Kg / 1b	1.036 / 2.28

Vanguard ELECTRIC

PRODUCT:
ANTI-POLLUTION POLYMERIC PIN INSULATOR 35KV

E55-D SG4

Material: HDPE

Dimensions: mm / in

Revision: 1

Proj: JULIO RONQUI

Execution date: 03/08/2020

Approval: SN: 06/10/21 VALDECIR

UTILIZATION: DISTRIBUITION AERIAL NETWORKS

Color: Gray

VANGUARD ELECTRIC, LLC