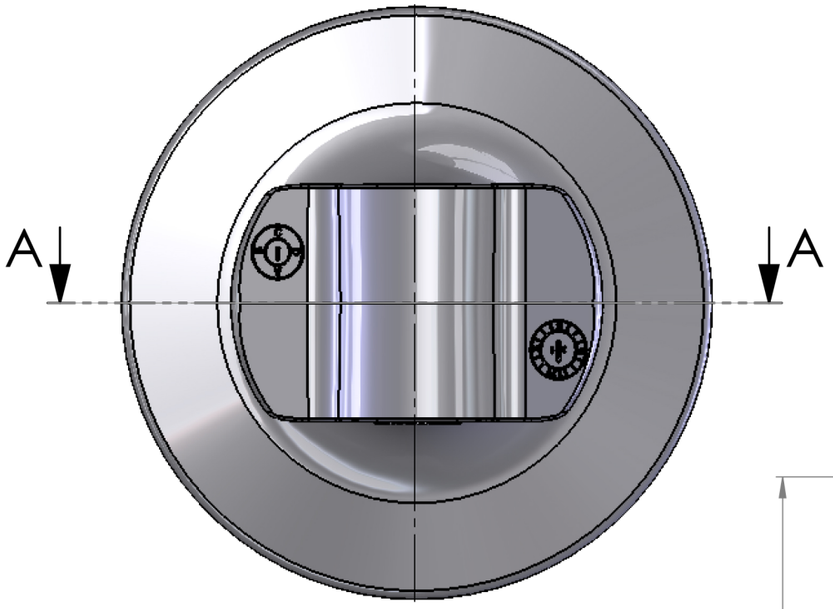

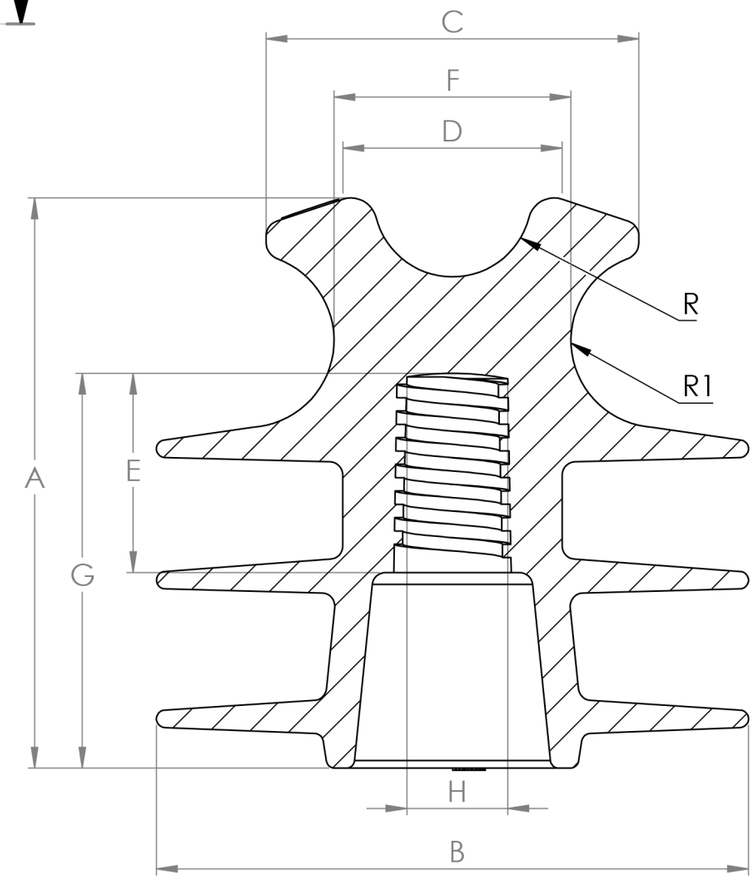

SECTION A-A

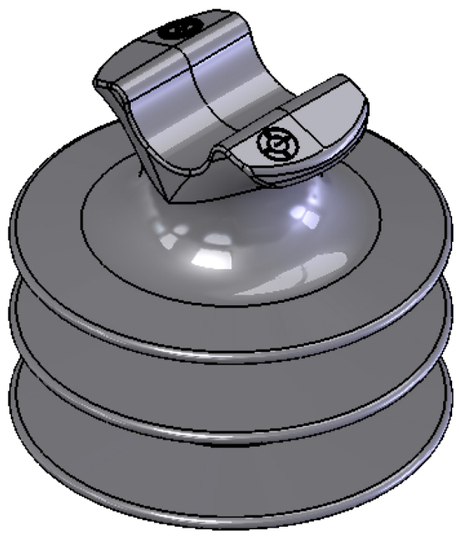

REVIEW INDEX				
N°	NAME	FUNCTION	NOTE	DATE
01	JULIO	PROJECTIST	NONE	23/02/2021
02	JULIO	PROJECTIST	CHANGE LINE 18	12/05/2021

ITEM	DESCRIPTION	DIMENSIONS	
		mm	in
01	LEAKAGE DISTANCE	360	14.17
02	DRY-ARC DISTANCE	190	7.48
03	A	128 ± 5	5.04
04	B	137± 5	5.39
05	C	85 ± 5	3.35
06	D	45 ± 5	1.77
07	E	45 ± 5	1.77
08	F	55 ± 5	2.17
09	G	88 ± 5	3.46
10	H	25 ± 3	1.00
11	R	19 ± 3	0.75
12	R1	19 ± 3	0.75
	ELECTRICAL VALUES		
13	NOMINAL FREQUENCY	Hz	50/60
14	TYPICAL APPLICATION	kV	15
15	LOW FREQUENCY DRY FLASHOVER	kV	70
16	LOW FREQUENCY WET FLASHORVER	kV	40
17	CRITICAL IMPULSE FLASHOVER - POSITIVE	kV	110
18	CRITICAL IMPULSE FLASHOVER - NEGATIVE	kV	130
19	LOW FREQUENCY PUNCTURE	kV	90
20	LOW FREQUENCY TEST VOLTAGE - RMS TO GROUND	kV	10
21	MAXIMUM RIV at 1000 kHz	µV	50
	MECHANICS VALUES		
22	CANTILEVER STRENGTH	kN / 1b	15 / 3300
	GENERAL CHARACTERISTICS		
23	NECK DESIGNATION		C
24	UNIT WEIGHT	Kg / 1b	0.50 / 1.10

Vanguard ELECTRIC ®

PRODUCT:
POLYMERIC PIN INSULATOR 15 KV

P55-3 SG4

Material: HDPE
Dimensions: mm / in
Drawing: REV 02

Projectist: JULIO RONQUI
Execution date: 23/02/2021
Approval: CG.09/13/21 VALDECIR

UTILIZATION: DISTRIBUITION AERIAL NETWORKS

Color: Gray

VANGUARD ELECTRIC, LLC